CRANKSHAFT AND FRONT BEARING COVER

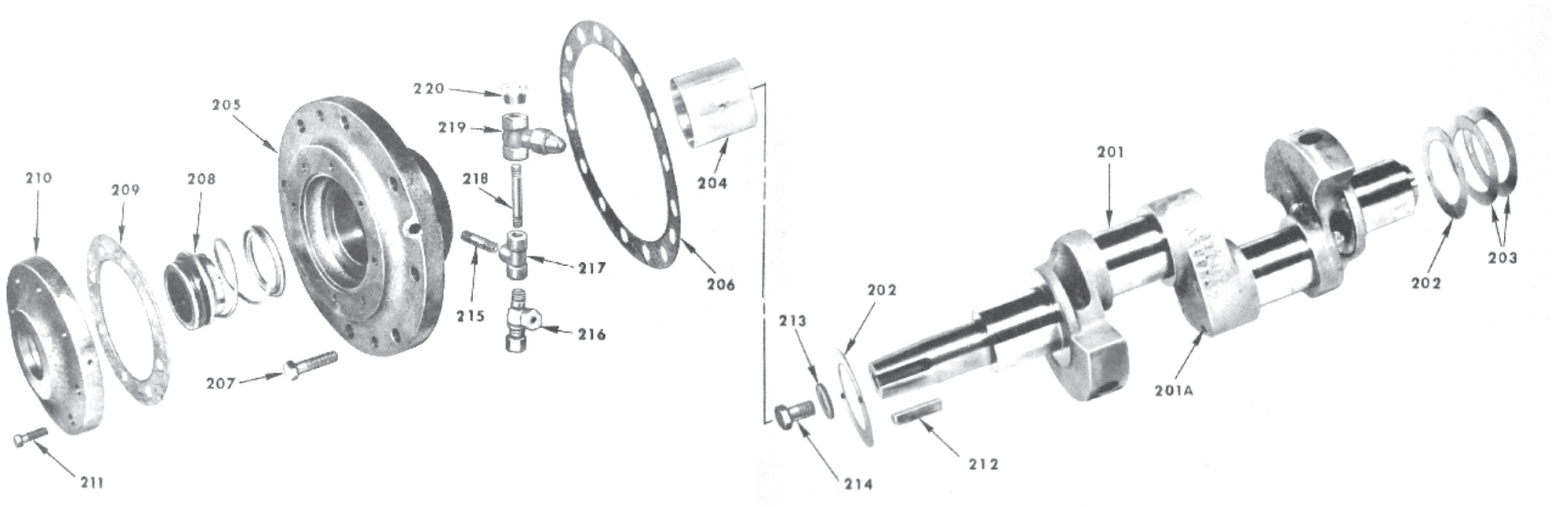

ITEM	DESCRIPTION	QUANTITY REQUIRED PER COMPRESSOR NUMBER OF CYLINDERS						VILTER PART NUMBER
		3	4	5	6	7	8	
201	Crankshaft (With Oilway Plugs)	1	1					A34827A
201	Crankshaft (With Oilway Plugs)			1	1			A34828A
201	Crankshaft (With Oilway Plugs)					1	1	A34829A
201A	Plug 1/8" Socket Head Pipe	3	3	3	3	1	1	13163A
202	Washer, Thrust	2	2	2	2	2	2	33623A
203	Shims, Rear Bearing (.010" Thick)	+	+	+	+	+	+	33625A
203	Shims, Rear Bearing (.015" Thick)	+	+	+	+	+	+	33625B
204 205 206 209	Front Bearing and Housing Assembly Kit	1	1	1	1	1	1	KT1001
207	Screw, Hex Head Cap ½" 13 x 1-3/4" lg	8	8	8	8	8	8	2796EL
208 & 209	Seal, Shaft Kit	1	1	1	1	1	1	KT507
210	Cover, Shaft Seal	1	1	1	1	1	1	32644A
211	Screw, Hex Head Cap ½" 16 x 1-½" lg	8	8	8	8	8	8	13149E
212	Key, Crankshaft ½" x ½" x 2-¼" lg	1	1	1	1	1	1	13396P
213	Washer, Coupling Hub	1	1	1	1	1	1	33741A
214	Screw, Hex Head Cap 5/8" 11 x 1-½" lg	1	1	1	1	1	1	13152C
215	Nipple, ¼" x 4" Sch. 80	1	1	1	1	1	1	13181G
216	Tee, ¼" O.D. Tube x ¼" M.P.T. Male Run	1	1	1	1	1	1	1509A
217	Tee, ¼" Steel Screw	1	1	1	1	1	1	10988
218	Nipple, ¼" x 2" Sch. 80	1	1	1	1	1	1	13181C
219	Valve, ¼" Straight Screw	1	1	1	1	1	1	3031D
220	Plug, ¼" Hex Head Pipe	1	1	1	1	1	1	132648